Design And Modification Of Camless Engine: A Review

Ashish Pal[1], Avinash Sahani[2], Krishna Shukla[3], Swapnil Shinde[4], Ashiwini Mate[5]

[1]Student, Saraswati College of Engineering, India, ashishpal7861@gmail.com
[2]Student, Saraswati College of Engineering, India, avinashsahani21@gmail.com
[3]Student, Saraswati College of Engineering, India, skns11796@gmail.com
[4]Student, Saraswati College of Engineering, India, swapnilshinde947@gmail.com
[5]Professor, Saraswati College of Engineering, India, ashu.mate45@gmail.com

***Abstract*:** The paper deals with The engines powering today's vehicles whether they burn gasoline or diesel fuel rely on a system of valves to admit fuel and air into the cylinder and the exhaust gases to escape after combustion. Cam has been an integral part of internal combustion engine from its invention. Cam controls the breathing channels of the IC engines and hence maintains constant valve timing. The problem in using cam shafts is being major power wastage in accelerating and decelerating the components of the valve train. Friction of camshafts, springs, cam belts etc., also robs us of precious power and worsens fuel economy not to mention contributing to wear and tear. In response to the needs of improved engines some mechanical or hydraulic devices have been designed to achieve some variable valve timing and to reduce the disadvantages accompanied with the usage of cams. Most four-stroke piston engines today employ one or more camshafts operated poppet valves. The lobes on the camshafts operate cam followers which in turn open the poppet valves. A cam less (or, free valve engine) uses electromagnetic, hydraulic, or pneumatic actuators to open the poppet valves instead. Actuators can be used to both open and close the valves, or an actuator opens the valve while a spring closes it.

***Keywords:* *camless engine; solenoid; actuators; electronic circuit; capacitor*.**

1. Introduction

In conventional internal combustion engines, the engine valve's position profiles are fixed according to engine crank angle. The engine valves including an intake and an exhaust valve are actuated by mechanically driven cams whose shape is decided by considering engine performance in various operating conditions. This causes a trade-off among engine speed, torque output performance, fuel consumption, and emission. In recent years, a significant amount of research on engine valve controls (Crane and Theobald, 1991; Ahmad and Theobald, 1989) has been conducted to demonstrate the advantage of variable valve actuation over the traditional cam-based valve actuation in both gasoline and diesel engines. The variable valve actuation can be realized by mechanical cam-based, electromagnetic, electro-hydraulic, and electro-pneumatic valve actuation mechanisms. The mechanical cam-based variable valve actuation is achieved with additional actuators for continuously changing valve timing phase shift (Schneider et al., 2008; Moriya et al., 1996). The electro-mechanical valve actuation has been studied in terms of actuator design (Parlikar et al., 2005) and control (Nagaya et al., 2006; Chladny and Koch, 2008).

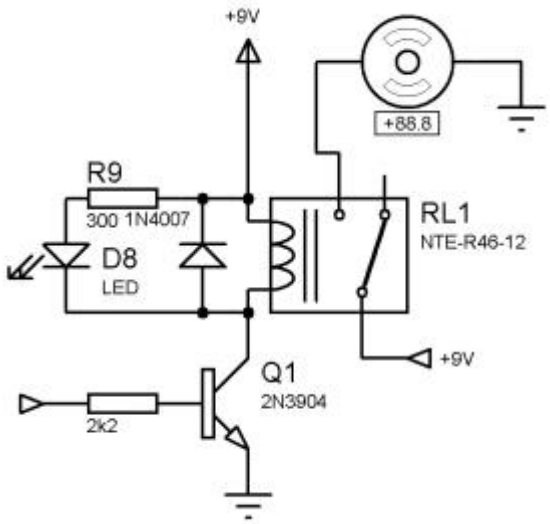

Fig.1.circuit diagram for relay switch

In electro-mechanical valve actuation systems, control difficulties related in valve seating velocity and cost problems with expensive position sensors were presented by Montanari et al. (2004) and Butzmann et al. (2000). The variable valve actuation with electrohydraulic actuators (Sun and Kuo, 2010; Allen and Law, 2002; Anderson et al., 1998) is achieved with digital or proportional valves to control oil flow into actuator's cylinders. The potential problems with electro-hydraulic actuation systems are energy consumption, valve seating velocity control, valve timing

$$L_f = \frac{120\, Q_{pump}}{N_{engine}\, A_p} \quad (38)$$

Substituting (35) in (38), the required pump speed for a refer- ence valve lift ($L_{,ref}$) at various engine speeds can be determined as follows:

$$N_{pump} = \frac{L_{f,ref}\, A_p\, N_{engine}}{120\, \eta_v\, V_{disp}} = r_{pe}\, N_{engine} \quad (39)$$

Since pump volumetric efficiency is not constant, a PID con- troller is used to control the hydraulic pump speed at different operating conditions to minimize the error between the measured and reference engine valve lifts.

Repeatability at the different operating temperatures. In this paper, the hydraulic snubber was designed to achieve soft valve landing without an impact on mechanical parts (e.g., piston and cylinder) and was validated through simulations and experiments (Battistoni et al., 2007). Camless engine valve.

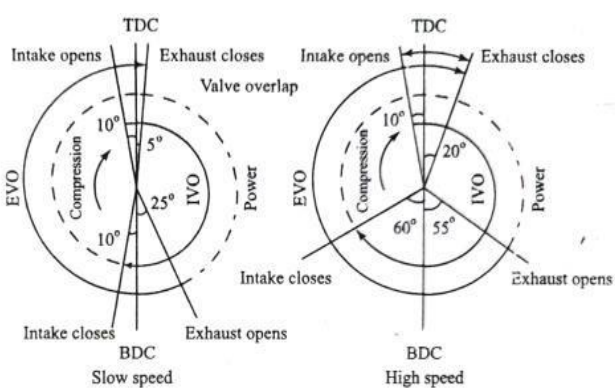

Fig.2. valve timing diagram of four stroke engines.

Actuator (CEVA) with hydraulic snubber is shown. The detailed specifications and parameters are described and nomenclature respectively. The hydraulic snubber for the purpose of the soft valve landing was designed using AME Sim software and its effectiveness was validated through experimental bench tests. In order to achieve a costeffective valve actuation system, a novel valve timing controller was proposed based on opening and closing timing detection without using expensive position sensors.

2.1 Literature Survey on Camless engine efficiency:

Camless internal combustion engines offer major improvements over traditional engines in terms of efficiency, maximum torque and power, pollutant emissions. Electromechanical valve actuators are very promising in this context, but still present significant control problems. Low valve seating velocity, small transition time for valve opening and closing, unavailability of position sensor are the main objectives to be considered in the design of the valve control system.

M.S. Ashhab et al. [1] This work presented an innovative actuator consisting of a piezo, a displacement ratio, a mechanical servo and a hydraulic valve piston for motion control in camless engine applications. A. Koch, S. Butzman et al [2] An electro-hydraulic camless variable valves actuation is developed and the 3D CFD model is built by AVL_FIRE software for the engine structural parameters design. Sathiya Narayanan et al [3] material removal rate, taper angle, circularity, runout, surface roughness wereobserved by varying current pulse on time, pulse off time, dielectric pressure and spark gap voltage. Increase in spark eroding process was experimentally observed. Y. Wang et al. [4]VTEC is a system to improve the volumetric efficiency of a 4 stroke internal combustion engine, resulting in higher performance at high RPM, and lower fuel consumption at low RPM. G. Fowler et al. [5] analyzed the material removal rate of aluminum in micro-EDM by varying gap voltage, capacitance and feed rate. They concluded that more variation in MRR was observed due to capacitance compared to others. They used ANN and SA as optimization techniquesThis work presented an innovative actuator consisting of a piezo, a displacement ratio, a mechanical servo and a hydraulic valve piston for motion control in camless engine applications. Paolo Mercorelli et al. [6] An electro-hydraulic camless variable valves actuation is developed and the 3D CFD model is built by AVL_FIRE software for the engine structural parameters design. Fujun Zhanget al. [7] The paper deals with some interdisciplinary problems whichoccur in anaggregate actuator which integrates a piezo- electric, stroke ratio displacement, a mechanical and a hydraulic part. Paolo Mercorelli et al.

2.2 Literature survey on various valve trains (EMVT):

Nowadays the proposed configuration of the EMVA, in camless engine, consists of the electromechanical device, valve springs, the armature, and position sensor. As an application for internal combustion engine, the specific requirements such as moving speed, accepted noise, and minimized volume space are primary concerned.

[8] used orifice diameter, depth of cut and work piece-abrasive material combination factor to find Abrasive mass flow rate, focus

diameter, traverse rate and pump pressure in AWJM. They found that results of neural network showed better than other techniques. Amir Khajepour et al. [9] In this paper, a new variable valve actuation system was intro-duced for the engine valvetrain. Using the proposed system, it is possible to control the engine valve's opening and closing angles along with its lift independentiy. Jieng-Jang Liu†et al [10] A new EMVA system is proposed with significant improvements then conventional ones. First of all, the need of enormous current for system starting is excused as the valves are always kept in valve-closed position before engine starts. T. Leroyn [11] It uses the intake and exhaust manifold quantities ,and stresses the role of the valve lift profiles . Liang Liu et al [12] The seating performance of EMVT is analyzed and improved. The advantage of the EMVT is its flexibility and simplicity. Xinyu Fan et al. [13] Based on the application of EMVT, a high compression ratio gasoline engine is realized in this study, and new approaches are proposed to depress the knock tendency. Due to the interactive effects of GCR and operational parameters on the engine torque, fuel economy, KI and so on. Cemal Baykara et al. [14] A novel mechanical poppet valve control mechanism based on skip cycle strategy and performing N and NS modes , was designed, manufactured and tested Wolfgang Hoffmann et al.(2006)[15] Problems with the saturation of the plant input are avoided by using learning algorithm. Yee-Pien Yang et al. [16] Variable cam timing systems, used in modern automotive engines to improve fuel economy, emissions. John Wagner et al.

2.3 Literature survey one actuations of camless engine:

[17] The design of an innovative PZT based actuator mechanism was proposed utilizing a novel stepping motion amplifier to deliver force and displacement at higher magnitudes and operating frequencies A. E. Balau et al. [18 VCT also affects the air charge and torque response of the engine and, subsequently ,vehicle drivability. The effects of VCT on air charge estimation and torque/drivability are discussed next. A. E. Balau et al [19] State-space model for an electro-hydraulic actuated clutch used in the automotive control systems for automatic transmission was developed. Amir Khajepour et al [20] A new variable valve actuation system was intro- duced for the engine valvetrain. Using the proposed system, it is possible to control the engine valve's opening and closing angles along with its lift independently. A. E. Balau et al [21] In this paper a state-space model for an electro-hydraulicactuated clutch used in the automotive control systems for automatic transmission was developed. Peter Eyabi et al. [22] Transient characteristics of the EMV were taken into account in the model, including saturation, hysteresis, bounce and mutual inductance.

Mrdjan Jankovic et al. [23] Variable cam timing systems, introduced in modern automotive engines to improve fuel economy, emissions, torque, and power present a more challenging problem with respect to air- charge estimator design. Nazli E. Kahveciet al [24] Variable cam timing systems, introduced in modern automotive engines to improve fuel economy, emissions, torque, and power present a more challenging problem with respect to air-charge estimator design.

Conclusion:

An electro hydraulic camless valve train was developed for a camless engine. Initial development confirmed its functional ability to control the valve timing, lift, velocity, and event duration, as well as to perform selectively variable deactivation in a four-valve multicylinder engine. The system employs the hydraulic pendulum principle, which contributes to low hydraulic energy consumption. The electro hydraulic valve train is integral with the cylinder head, which lowers the head height and improves the engine packaging. Review of the benefits expected from a camless engine points to substantial improvements in performance, fuel economy, and emissions over and above what is achievable in engines with camshaft-based valve trains. The development of a camless engine with an electro hydraulic valve train described in this report is only a first step towards a complete engine optimization. Further research and development are needed to take full advantage of this system exceptional flexibility.

Future Scope:

At present the highly reputed automobile makers like Fiat, BMW and TATA motors are doing research to develop this technology. Further research and development are needed to take full advantage of this system's exceptional flexibility. This concept has to be developed with utmost case with the real the real time engine. Valve timing and performance has to be analyzed with realtime working engine. Camless engine can also be developed for variable valve timing. Camless engine also has scope in stationary engines because of less vibrations. As the camless engine removes all the disadvantages of cam engine it also developed for application in aerospace.

References:

[1] M. S. Ashhab, A. G. Stefanopoulou, J.A. Cook, M. Levin "Camless engine control for robustunthrottled operation", SAE paper, vol.35 no.960581, (1996).

[2] S. Butzmann, J. Melbert, A. Koch "Sensorless control of electromagnetic actuators for variable valve train", SAE paper, vol.2, no. 2000-01-1225, (2000).

[3] F. Filicori, C. Guarino Lo Bianco, A. Tonielli "Modeling and control strategies for a

variable reluctance direct-drive motor", IEEE Trans. Ind. Electron., volume 4, no. 1, pp. 105–115, (Feb. 1993).

[4] Y. Wang, A. Stefanopoulou, M. Haghgooie, I. Kolmanovsky, M. Hammoud "Modeling of an electromechanical valve actuator for a camless engine", vol.5, Proc. AVEC 2000, (2000)

[5] G. Fowler et al, Y Wang, M.Haghgooie , "Parameter optimization of machining processes using teaching–learning-based optimization algorithm", Int J Adv Manuf Technol'',(2009).

[6]. Paolo Mercorelli, Nils werner, A Review Study on Working of Electrohydrauli camless Engine; International Journal of IT, Engineering and Applied Science Research (IJIEASR) Vol.3, Pg. No. 6, June 2014

[7]. Fujun Zhang, Shan Wang, control of an electromechanical camless valve actuator, Proceedings of the American Control Conference, Anchorage, vol.9, AK page no. 8-10 May, 2002

[8]. Butzmann, S., Melbert, J., and Koch, A., "Sensorless Control of Electromagnetic Actuators for Variable Valve Train,"vol.6, SAE Paper Jan 2000

[9]. Tsao, T-C., and Tomizuka, M., "Robust Adaptive and Repetitive Digital Tracking Control and Application to a Hydraulic Servo for Noncircular Machining," vol.23, Transactions of ASME, 1994

[10]. Wang, Y., Stefanopoulou, A., Haghgooie, M., Kolmanovsky, I., and Hammoud, M. "Modelling of an Electromechanical Valve Actuator for a Camless Engine," vol.34,5th International Symposium on Advanced Vehicle Control, Ann Arbor, Michigan USA, 2000

[11]. Stubbs, A., "Modeling And Controller Design of an Electromagnetic Engine Valve," vol.11, M.S. Thesis, University of Illinois at Urbana-Champaign, 2000.

[12]. V. Ganeshan, IC engines fourth edition, McGraw Hill Education(India) private limited, volume 247, pp.123-323,2009.

[13] Ginoya, D., Shendge, P., and Phadke, S. (2014). Sliding mode control for mismatched uncertain systems using an extended disturbance observer. IEEE Transactions on Industrial Electronics, vol.45, 61(4), 1983–1992.

[14] Cemal Baykara, O. Akin, Cemal Baykara, (2009). Modeling of a Pressure Reducing Valve Actuator for Automotive Applications, In: Proc. of 18th IEEE International Conference on Control Applications, July 8-10, Saint Petersburg, Russia, pp. 1356-1361Z

[15] Wolfgang Hoffmann' Anna G. Stefanopoulou "Electro-magnetic valve actuation system e-valve: convergence point between requirement of fuel economy and cost reduction, vol.67, SAE Paper (2010).

[16] Yee-Pien Yang, Jia-Hong Xu, A supervisory energy-saving controller for a novel anti-idling system of service vehicles.vol.36, IEEE/ASME Trans Mechatron 2017;22(2):1037–46 .

[17] John Wagner, Dadfarnia, Experimental investigationofrobustmotiontrackingcontrolfor a2-dofflexure-based mechanism, vol.58,IEEE/ASMETrans.Mechatron.19(6)(2014)1737–1745.

[18] Mrdjan Jankovic, Stephen w. magner, (2009). Modeling of aPressure Reducing Valve Actuator for Automotive Applications, vol.49, In: Procof 18th IEEE International Conference on Control Applications, July 8-10, Saint Petersburg, Russia, pp. 1356-1361.

[19] A. E. Balau and C. Lazar (2008). Coordinative control of energy saving program ablevalves,vol.84,In:IEEETransactionson Control Systems Technology, volume 16, pp. 34-45.

[20] Amir Khajepour, Yanjun Huang, Ford Research Laboratory, 2101 Village Road, MD 2036 SRL, Dearborn, MI 48121-2053, USA Received 22 March 2001

[21] A. E. Balau and C. Lazar, I. Kolmanovsky, and D. Hrovat. Hybrid modeling and control of a multibody magnetic actuator for automotive applications. In Proceeding of the 46th IEEE Conference on Decision and Control, pages 5270–5275, New Orleans, LA, December 2007.

[22] Peter Eyabi, Gregory Washington Fast-acting, long-stroke solenoids with two springs IEEE Trans Indus Appl1990;26(5)

[23] Mrdjan Jankovic, Steve W. MagnerFord Research Laboratory, 2101 Village Road, MD 2036 SRL, Dearborn, MI 48121-2053, USA Received 22 March 2001

[24] Nazli E. Kahveci Ilya V. Kolmanovsky 5th IFAC Symposium on Mechatronic SystemMarriott Boston CambridgeCambridge, MA, USA, Sept 13-15, 2010.